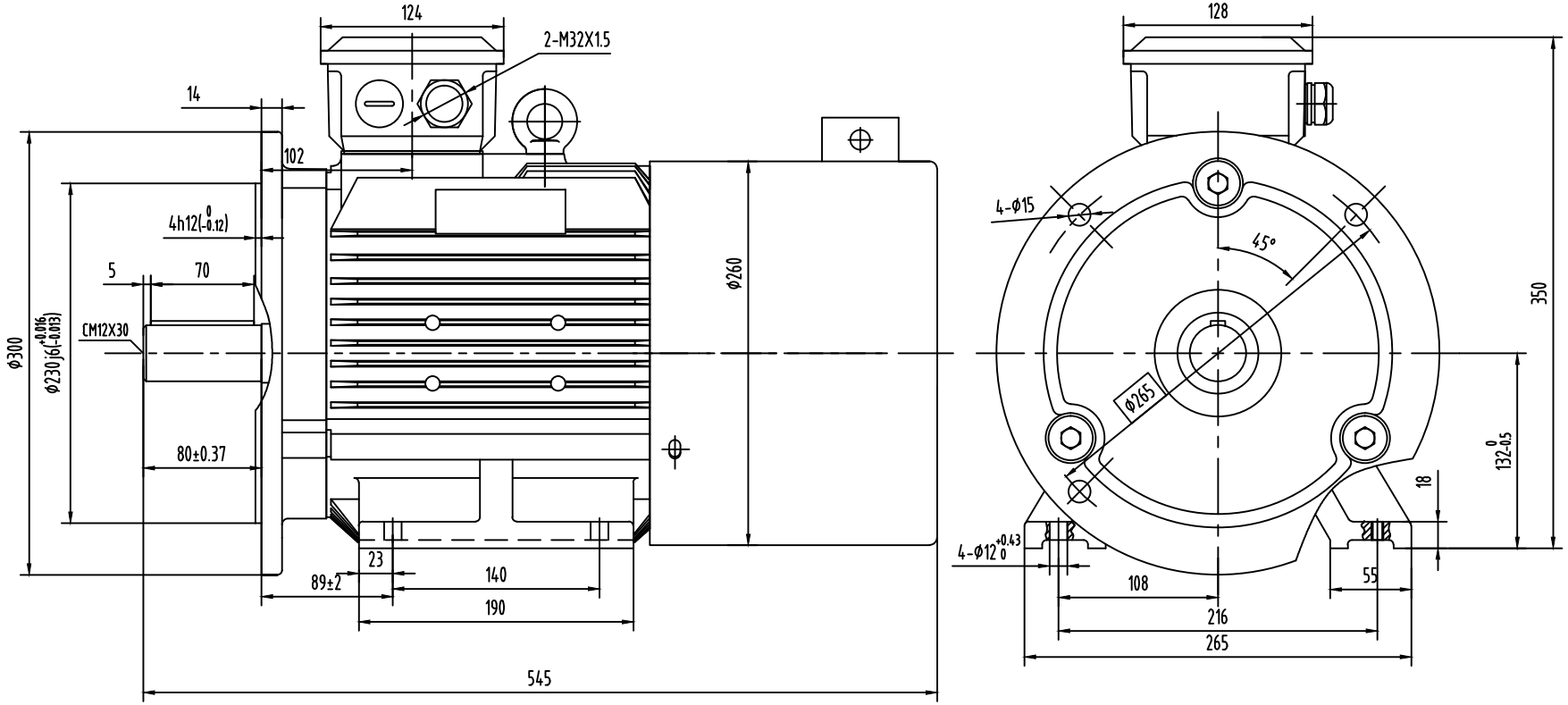

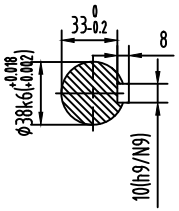

								OUTLINE
Mark	No.	Zone	File changing No.	Signature	Date			OMV0-132S0-04~08P B35
Design			Standard			Sign	Weight	Scale
Check								1:3
Auditing								Wuxi OMEC LTD.
Technics			Approval			Total page	page No.	